evaton technologies

200 School St
Pittsburgh, PA 15220-2718
http://www.evatontechnologies.com/

SDIY MDRONE
Assembly Manual
Revision A - Parts & PCB Kit

Introduction

Thanks for purchasing the SDIY[1]MDRONE kit from Evaton Technologies! The SDIY MDRONE kit is a battery-powered standalone tabletop drone synth that can be built in just a few evenings. The SDIY MDRONE kit is available as just parts and PCB (build your own case), or as a complete parts + PCB + pre-drilled enclosure, for those who wish to get up and running right away[2].

The SDIY MDRONE voice architecture consists of three independent square-wave oscillators, which are mixed in a fixed summing mixer. The mixer output is then fed to a semi-resonant bandpass filter, with adjustable center frequency and bandwidth. A “Grit” setting allows overdriving the filter for dirtying-up the sound and making a more hard-hitting timbre.

Output is a 1/4” mono (TS) line-level audio jack.

Skill Level

The SDIY MDRONE kit, while not necessarily aimed at the complete novice, can be built by anyone with some soldering experience. All components are standard, readily-available thru-hole components. The spacing of the components on the circuit board is generous, so that no special tools are required to install. These instructions assume you already know how to solder, and cut and strip wires.

Precautions

Soldering irons are HOT! Be careful not to touch the business end of your soldering iron at any time. Also note that components that have been soldered will remain hot for a few moments. If you need to hold something to solder it, it is recommended **NOT** to use your fingers. Wear long pants and long sleeves to avoid solder splash from burning exposed skin.

---

[1] Synthesizer Do-It-Yourself

[2] If you purchased this kit as a complete parts + PCB + enclosure kit, additional instructions for the enclosure will be included in your shipment.

Tools Required

A few basic electronic assembly tools are needed to complete the assembly of the circuit board. If you are building your own case, some additional tools are required to drill holes.

Tools Required - PCB assembly:
- Soldering iron. Minimum 25 watt pencil iron; preferred temperature-controlled, but not necessary.
- Small wire cutter
- Wire stripper
- Electronic solder. 60/40 lead/tin or 63/37 lead/tin, or lead-free. Use rosin-core solder. Do **NOT** use acid-core[3] (plumbing) solder!
- Pair of needle nose pliers (optional) for bending leads and holding components
- Small bench vise or “helping hands” (optional) for holding the PCB.
- Small adjustable wrench or 10mm deep-well socket, for tightening potentiometer nuts
- 9/32” open-end wrench for tightening toggle switch nuts
- De-soldering braid (optional) for cleaning up mistakes
- Multimeter with ohms and volts setting. Not a necessity, but handy for testing.

Tools Required - Case assembly:
- Phillips screwdriver
- If building your own case, a 9/32”, 13/64”, and 3/8” drills are required, to drill holes for the potentiometers, toggle switches, and output jack.

Also Required:
- 9V battery. Alkaline preferred, but heavy-duty is fine, too. A properly constructed SDIY MDRONE will run many hours on a single battery.
- 1/4” mono patch cord (TS)

---

[3] Acidcore music is great. Acid core solder is not.

Signal Flow

The SDIY MDRONE consists of three square wave generators that feed a summing mixer. Each oscillator can be turned on and off with a switch. Each oscillator's frequency can be controlled by a front panel knob. The output of the summing mixer feeds a bandpass filter. The filter bandwidth and center frequency can be controlled with front panel knobs.

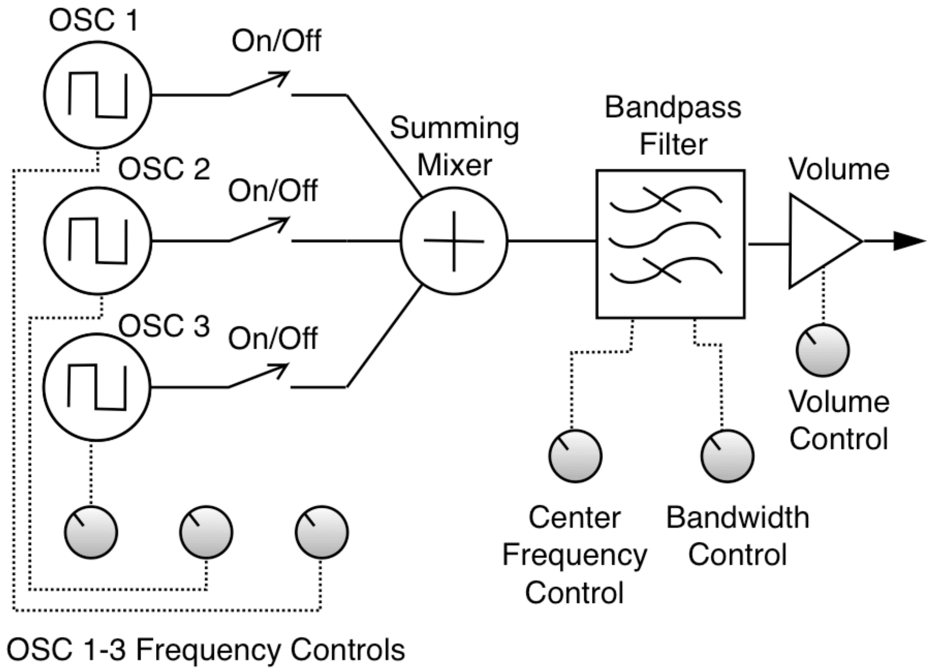
OSC 1
On/Off
OSC 2
On/Off
OSC 3
On/Off
Summing Mixer
Bandpass Filter
Volume
Volume Control
Center Frequency Control
Bandwidth Control
OSC 1-3 Frequency Controls

Circuit Theory

While it is not necessary to completely understand exactly how the circuits in the SDIY MDRONE work, a top-level description of the theory is presented here, for those who'd like to get a little more acquainted with electronics. Please see the included schematic diagram to follow along[4]. The schematic is divided up into a few logical sections: The oscillators, the summing mixer, the virtual ground reference, and the bandpass filter.

Oscillators

The three oscillators are the type known as a "relaxation oscillator." In a relaxation oscillator, a capacitor is slowly charged up from zero volts until the voltage across the capacitor passes a certain threshold, at which time, the circuit begins to discharge the capacitor. Once the capacitor voltage falls below a certain voltage, the circuit again begins charging the capacitor. The charge and discharge rate is determined by the resistance of the control knob on the front panel.

---

[4] Or skip ahead to the next section; there won't be an exam on this material!

If we look at the schematic, OSC 1 is formed by the capacitor C6, resistor R17, and variable resistor (potentiometer) R16, and is controlled by the 40106 Schmitt Trigger chip. A Schmitt trigger circuit outputs zero volts when the input is above a certain voltage. It outputs 9 volts when the input is below a certain voltage. So, looking at the voltage on C6, it starts at zero volts, so the output of IC1A is 9 volts. That 9 volts gets fed back onto C6, and it starts to charge.

Once C6’s voltage gets high enough, IC1A switches its output from 9 volts to zero volts. C6 now begins to discharge. This repeats over and over again, making an oscillation!

IC1B takes this rising and falling voltage and turns it into an on/off signal (a square wave!). Adjusting R16 (the front panel knob) adjusts how quickly C6 charges and discharges, thus setting the frequency.

OSC 2 and OSC 3 work the same way.

Summing Mixer

U1A is an operational amplifier (op-amp). It adds together the three signals coming through R2, R4, and R18. An op-amp connected in this configuration is called a Summing Amplifier.

Virtual Ground Source

R5, R6, and U1D form a buffered voltage divider. 9 volts goes through R5 and R6 to ground. Because R5 and R5 are equal in value, the voltage at pin 12 on U1D is exactly half that voltage, or 4.5 volts. U1D is configured as a “unity gain follower,” meaning that the output at pin 14 is exactly the same voltage as the input on pin 12, but it can drive a bigger load without the voltage being affected.

The “virtual ground” of 4.5 volts is required because the SDIY MDRONE operates from a single 9V supply. Most op-amp circuits require a positive voltage supply and a negative voltage supply to operate. We can “fake out” the op-amps by creating this “virtual ground” that is exactly half the battery voltage, and then pretend that the 0 volts terminal of the battery is actually “negative 4.5 volts with respect to virtual ground”. Then the +9V terminal of the battery is “positive 4.5 volts with respect to virtual ground.”

Bandpass Filter

The bandpass filter is an active filter that uses two op-amps and capacitors and resistors to filter out signals that are outside of its "pass band". Frequencies of sound that are below the filter's pass band are removed, and frequencies that are higher than the pass band are also removed, but frequencies that fall inside the pass band are passed through to the output. The width of the pass band (the difference between the highest frequency that can pass and the lowest frequency that can pass) is called the filter bandwidth.

The frequency that falls exactly halfway between the lowest frequency that can pass and the highest frequency that can pass is called the center frequency of the filter, or F_C. R23 adjusts the bandwidth of the filter, and R13 adjusts the F_C.

While this is a very basic description of the filter operation, a more thorough description of how the filter does this is beyond the scope of this manual. Further reading is suggested if you want to gain a better understanding of op-amp filters[5].

Kit Contents

- A bare printed circuit board (PCB) and 18-foot (6m) spool of wire
- 2x 0.01 µF 16V capacitors
- 3x 0.1 µF 16V capacitors
- 3x 1.0 µF 16V capacitors
- 1x 470Ω resistor
- 2x 1.1kΩ resistor
- 4x 4.7kΩ resistors
- 9x 10.0kΩ resistors
- 1x 47kΩ resistor
- 4x 100kΩ linear potentiometers
- 1x 100kΩ audio potentiomer (Frequency Pot)
- 1x 5kΩ audio potentiometer (Volume Pot)
- 2x 14-pin DIP IC sockets
- 1x LM324 op-amp IC
- 1x CD40106 Hex Schmitt Trigger IC
- 5x DPDT switches
- 9V battery snap and battery holder
- 1/4" mono audio output jack

---

[5] While there are many good books on the subject, an internet search of "active filter design" will also yield some very useful datasheets and application notes from various op-amp vendors that are quite thorough. The filter in the MDRONE is a dual-amplifier passband design.

Assembly Instructions

Note On Assembly Of Front Panel Components

While most of the components on the SDIY MDRONE get soldered directly to the PCB, the front panel components are first soldered to wires, and then the wires are soldered to the board. Leave long enough wires to allow easy assembly at the end. While assembling the PCB, it's best to just solder the front panel components to long leads (6 to 8 inches), and leave them laying beside the board. Don't attempt to install the front panel components into the front panel until the board is completely assembled.

Preparation

To begin assembly, clear a space on your workbench[6]. It helps to have good lighting, and your tools located where they can be easily reached. Plug in your soldering iron and let it come up to temperature. It helps to have a dampened sponge nearby, to wipe the solder tip on to keep it clean. Place the bare circuit board in the middle of your work area, with the white silkscreen legend facing you.

The next few paragraphs will go step-by-step through the process of assembling the circuit board. You may wish to check these steps off as you go, to keep track of your place.

____ Sockets

First, install the two IC sockets in the locations U1 and U2 on the PCB. There is a notch at one end of the socket. Line up the notch in the socket with the notch in the white component outline on the board.

To install the socket, place the socket in the holes on the board for the socket, and make sure the socket is flat against the board all the way around. You can use a piece of clear tape to hold the socket in place while you solder the pins. Remove the tape after soldering.

____ Virtual Ground Resistor Divider

Install two of the 10kΩ resistors (brown/black/orange) into locations R5 and R6 on the board. Carefully bend the leads of the resistors so that they fit through the two holes in the board at the ends of the component outline. Bend the leads slightly on the back side of the PCB to hold the resistors in place, and solder the resistors in place. When you are sure you've made a good solder joint on all four pads, cut the excess leads off.

---

[6] Hey, that's **my** first step. My bench is always a complete mess!

____ 9V Battery Snap

The 9V battery snap comes with pre-stripped leads. The red lead is the positive lead, and the black lead is the negative. Solder the black lead to the hole marked P8 on the PCB. Solder the red lead to the hole marked P7.

____ Power Switch

Get one of the toggle switches out, and solder a 6-inch wire to one of the center pins. It doesn't matter which center pin. Solder another 6-inch wire to another pin on the same side of the switch. Although the kit ships with DPDT[7] switches, we will be using them as if they were SPST[8] switches. The switch is "ON" when the toggle lever is pointing **away** from the pair of pins you've soldered to.

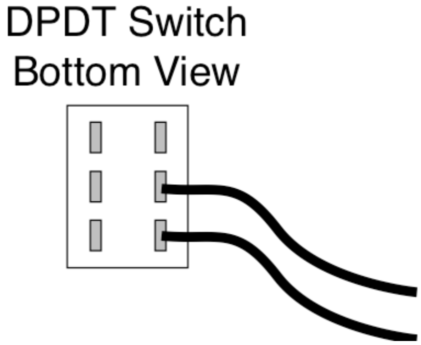

Now solder the other end of one of those wires to the hole marked P6 on the PCB. Solder the other wire to the hole marked P5 on the circuit board.

____ Test Power-Up

At this point, we can perform a simple test of the circuit board, if you have a multimeter with OHMS and VOLTS settings. First, we'll check that there is not a power-to-ground short circuit. Set your meter to the OHMS (Ω) setting.

Put one meter probe on one contact of the 9V battery snap, and put the other probe on the other contact of the 9V battery snap. The meter should read an infinite number of ohms (open-circuit). If not, go back and check your solder joints.

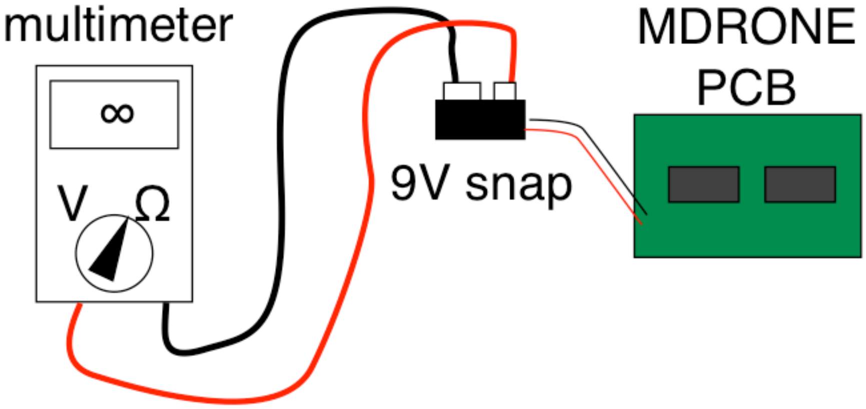

---

[7] Double-Pole-Double-Throw

[8] Single-Pole-Single-Throw

Now, flip the power switch. The meter should still read infinite resistance (open-circuit).

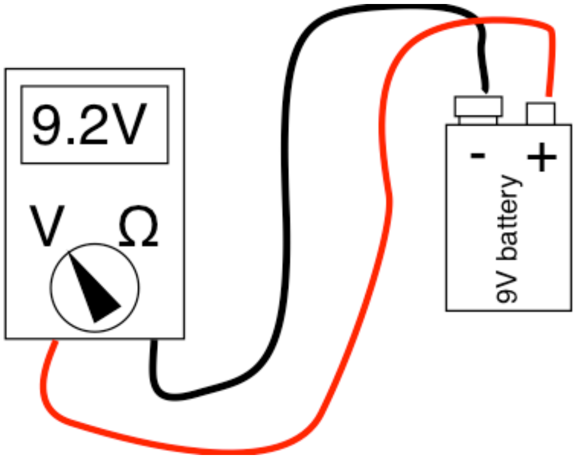

Next, change your multimeter to the VOLTS setting. If it is a manual-range meter, make sure it is set up to read at least 9 volts full scale. Many meters will have a 0-20V setting.

Put the positive (red) probe of the multimeter on the positive (smaller) terminal of your 9V battery. Put the negative (black) probe on the negative (larger) terminal of the 9V battery. The multimeter should read somewhere between 9 and 10 volts. Congratulations! Your battery is good!

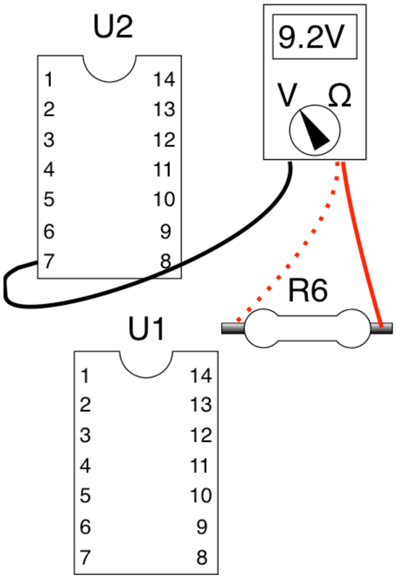

Now, for our first functional test of the board. Plug the battery into the 9V snap. Touch the negative probe of the multimeter to pin 7 of the socket in U2. Touch the positive probe to the lead of R6 that is nearest the edge of the PCB. Turn the power switch ON. The multimeter should read 9 volts.

Now, with the negative lead of the multimeter still touching pin 7 of the U2 socket, touch the positive probe to the other end of R6. The meter should read approximately 4.5 volts. If not, unplug the battery, and go back and check your work. If everything worked out, turn off the power switch, and unplug the battery from the 9V snap before continuing assembly.

____ 0.1 μF Bypass Capacitors

Now, install the three 0.1 μF bypass capacitors into C3, C4, and C5 locations and solder into place. It does not matter which direction these three capacitors are installed. After soldering, trim the leads. You may wish to repeat the **Test Power-Up** section again after installing these three capacitors, just to verify there are no short-circuits.

____ 10kΩ Resistors

Install the remaining 10kΩ resistors into locations R2, R4, R7, R8, R10, R18, and R22.

____ 1.1kΩ Resistor

Install a 1.1kΩ resistor in location R14. There will be another 1.1kΩ resistor left over; we'll talk about this a little later.

____ 4.7kΩ Resistors

Install 4.7kΩ resistors into locations R3, R17, and R19. There will be one 4.7kΩ resistor left over; we'll talk about this a little later.

____ 47kΩ Resistor

Install the 47kΩ resistor into location R9.

____ 470Ω Resistor

Install the 470Ω resistor into location R24.

____ 0.01 *μ*F (10,000 pF) Capacitors

Install the 10,000 pF capacitors into locations C2 and C8. It does not matter which way you install them.

____ 1.0 *μ*F Capacitors

The 1.0μF capacitors are polarized electrolytic capacitors. These are the timing capacitors for the three oscillators. Because they are polarized, you must pay attention to which direction you install them. The capacitor has a gray stripe on one side. The lead next to this stripe is the negative lead. The other lead is the positive lead. Make sure the positive lead (the lead opposite the gray stripe) is installed in the hole marked with a plus sign (+) on the board. Install the 1.0 μF capacitors in locations C1, C7, and C6. You may have to bend C6 just slightly in order to clear the chip socket.

___ Take a break!

At this point, nearly all the thru-hole components have been soldered to the board. Only a 4.7k resistor and a 1.1k resistor remain. The rest of the components are front-panel components. Take a break for a moment[9], and re-check your solder joints; make sure all the components you installed so far have good joints.

And Now, A Few Words About Potentiometers

The next steps of assembling your SDIY MDRONE involve wiring up the front-panel components. As mentioned earlier, it's best to wire the front panel components, and lay them out beside the board, rather than attempting to mount the front panel components first and then wiring.

There are six potentiometers included with the kit. Four of them are 100kΩ linear potentiometers, one is a 100k audio-taper pot, and one is a 5kΩ audio-taper potentiometer.

The PCB outline for the potentiometers has three numbered pads. These correspond to the three legs of the potentiometers, as labelled in the photo on the left. Wire pin 1 to the leftmost pin, pin 2 to the center, and pin 3 to the rightmost pin on the potentiometer. If your knobs seem to turn backwards of what you expect, reverse pins 1 and 3. (This may be the case for the Bandwidth knob -- if you prefer to think of it as a Resonance knob, you may wish to reverse pins 1 and 3).

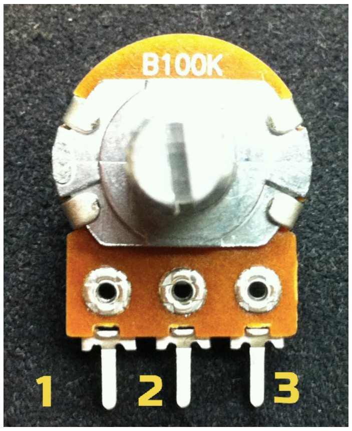

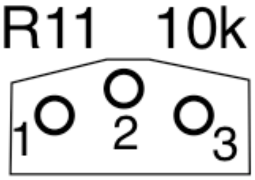

---

[9] It was at this very moment that I also took a break from writing this assembly manual. Whew!

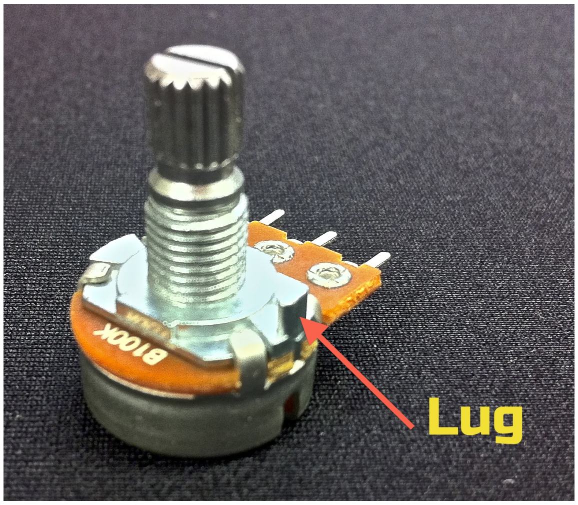

The included potentiometers feature an anti-rotation lug. If you want to use this lug, you'll need to drill an extra hole for each potentiometer. Unless you're making your case out of an extremely slippery material[10] , you probably won't need to use the lug. This will save you from drilling 6 extra holes, but you'll need to remove the antirotation lug. This is easy to do with a small pair of pliers. Just hold the potentiometer firmly in one hand, grasp the antirotation lug firmly with the pliers, and wiggle the pliers back and forth. The tab will usually break very cleanly.

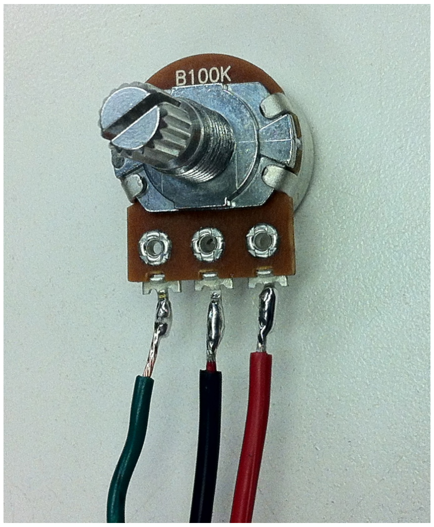

And finally, solder the wires to the long leads on the pots. Although there are rivet holes on the pot, it's best to solder to the long leads, which put the solder iron heat a little further away from the inner mechanism of the pot.

Ok, with that said, we're ready to finish construction of the SDIY MDRONE!

____ 5kΩ Audio Potentiometer (Volume Pot)

Solder one 6- to 8-inch wire to each of the three leads on the 5kΩ potentiometer. Bearing in mind the numbering scheme mentioned above, solder the other end of each of these three wires to pads 1, 2, and 3 of the potentiometer outline R11 on the PCB.

You may wish to use a permanent marker to write on the back of this potentiometer, to label it "Volume Control".

---

[10] Some plastics are a bit slippery, and might require the anti-rotation lug.

____ 100kΩ Linear Taper Potentiometers

Solder one 6- to 8-inch wire to each of the three leads on each of the 4 100kΩ linear (B100K) potentiometers. Solder the other ends of these wires to the pads for R1, R16, R20, and R23. You may want to use a permanent marker to label these pots as follows:

- R16: OSC 1
- R20: OSC 2
- R1: OSC 3
- R23: Filter Width (Q)

____ 100kΩ Audio Taper Potentiometer

Solder one 6- to 8-inch wire to each of the three leads on the 100kΩ audio (A100K) potentiometers. Solder the other ends of these wires to the pads for R13. Label this potentiometer “Filter Frequency (Fc)”

____ Toggle Switches

Next, solder two 6- to 8-inch wires to each of the 5 toggle switches, as shown here:

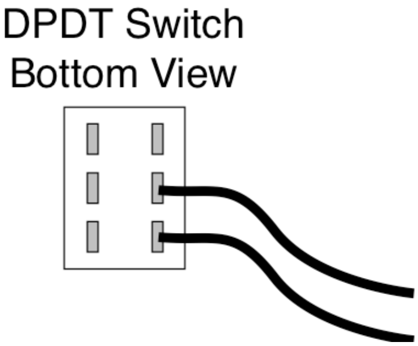

____ Power Switch

Label the first toggle switch “Power”. Solder one of the leads to the hole marked “P5” on the PCB, and the other lead to **P6**

____ Osc 1 Switch

Label the next toggle switch “Osc 1”. Solder one of its leads to P15, and the other lead to P16.

____ Osc 2 Switch

Label the next toggle switch “Osc 2”. Solder one of its leads to P17, and the other lead to P18.

____ Osc 3 Switch

Label the next toggle switch “Osc 3”. Solder one of its leads to P19, and the other lead to P20.

____ Grit Switch[11]

This is an optional switch, which selects “Grit” or “Non-Grit” audio modes. In Grit mode, the bandpass filter is overdriven somewhat, which makes a dirty, gritty sound. Non-Grit mode is just barely overdriven, giving a much cleaner sound. Certain settings of the knobs will still cause a slight amount of dirt when in Non-Grit mode, but for the most part will be clean.

To select between Grit and Non-Grit, you need to decide the value of the resistor R21.

If you want Grit mode all the time, install a 4.7kΩ resistor in R21 now, and leave out the final toggle switch.

If you want Non-Grit mode all the time, install a 1.1kΩ resistor in R21 now, and leave out the final toggle switch.

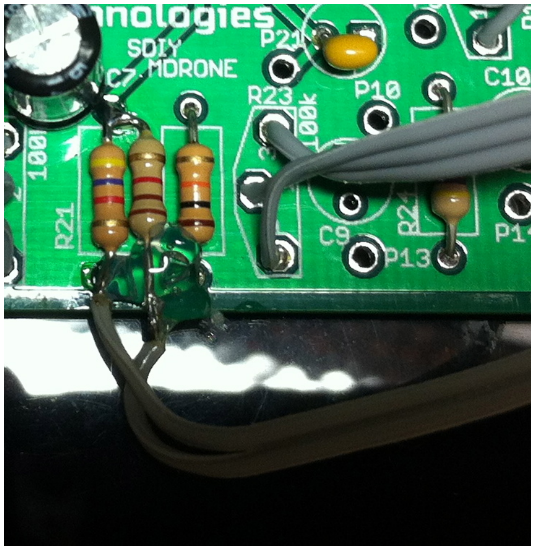

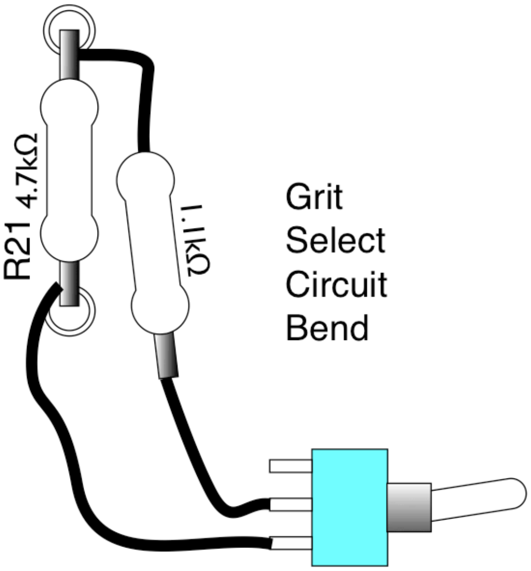

---

[11] The Grit Selection is technically a “circuit-bend” -- additional functionality added to the circuit, after it was designed! The SDIY MDRONE is ripe ground for circuit bending; see the appendix for more circuit-bending ideas.

If you want to be able to select between Grit and Non-Grit, then install a 4.7kΩ resistor in R21, and also solder one end of a 1.1kΩ resistor to one end of the 4.7kΩ resistor. Solder the free end of the 1.1kΩ resistor to one of the leads of the final toggle switch. Solder the remaining lead of the toggle switch to the other end of the 4.7kΩ resistor.

____ Audio Output Jack

Finally, solder a 6-to-8-inch wire to each of the two solder lugs on the audio output jack. The lug which connects to the TIP connection is the Audio Signal, and the other lug is the Audio Ground. Solder the other end of the Audio Signal wire to the hole marked P2 on the PCB. Solder the Audio Ground wire to the hole marked P12 on the PCB.

____ Insert the TL084

Insert the TL084 Op-Amp integrated circuit into the socket marked U1 on the PCB. Take note that there is a notch on the integrated circuit at one end. Make sure this notch faces the end of the socket nearest the “U1” label. (It should match the notch in the socket, if you installed the socket correctly.)

You may need to carefully bend the pins on the chip; they tend to be sprung fairly heavily from the chip factory. This is because, normally a chip would be inserted by a machine, and the extra springiness is required by the insertion machine. Since we’re installing by hand, you may need to use a pair of needle nose pliers to bend the pins slightly inward to make it easier to install into the socket.

____ Insert the CD40106

Insert the CD40106 Hex Schmitt Trigger integrated circuit into the socket marked U2 on the PCB. Again, take care to align the notched end of the chip to the end of the socket nearest the “U2” label on the PCB. It should match the notch in the socket.

____ R12 and R15

There are two resistor locations on the PCB marked “See Text”. Do not install these resistors.

____ C9 and C10

Do not install anything in C9 and C10 at this time. They are locations provided for help with additional circuit-bends.

____ (optional) Functional Test

At this point, the MDRONE should be ready to produce sound. You may want to test this before going to the trouble of mounting the knobs, switches, and output jack to the panel. To do so, carefully plug a 1/4" mono audio patch cable (not included) into the audio output jack. Plug the other end of this cable into your audio output system -- a mixer, PA amplifier, etc.

Turn off the Power, OSC 2 and OSC 3 switches. Plug in a 9V battery.

Turn the R11 Volume potentiometer to its center position. Switch on the Power switch (P5/P8). Turn on the OSC 1 switch. You should hear a constant tone from your amplifier. Rotate the OSC 1 potentiometer (R16) left and right. The tone should go down and up in pitch.

Turn off the OSC 1 switch, and turn on OSC 2. You should hear a tone again. Now rotate the Osc 2 potentiometer (R20). The pitch should go up and down.

Repeat this for the OSC 3 switch and potentiometer, R1. Now rotate the Filter Width (R23) potentiometer. The sound color should change. Likewise for the Filter Frequency (R13) potentiometer.

Finally, rotating the Volume knob should make the sound get louder and quieter. If all of this works, then it's time to begin assembling the knobs and switches to the panel. If not, go back and check your work carefully.

____ Assembling the Controls

Turn off the power to the SDIY MDRONE. If you are using the optional pre-made case, follow the case assembly instructions in the case assembly manual.

If you have made your own case, you'll need to drill six 9/32" holes, one for each of the potentiometers, and five 13/64" holes, one for each of the toggle switches. You'll need to also drill a single 3/8" hole for the audio output jack.

Included in these directions are a sample drill template. If you print this PDF at 1:1 scale, you should be able to use the sample drill template to locate the holes for a front panel, and also use the template as an overlay for your panel if you so choose. Two versions of the template are provided; one does not have the Grit switch, in case you chose not to implement this feature.

After drilling the holes, poke the potentiometers thru the holes, and fasten with the included washer and nut. Do the same for the toggle switches and audio output jack. You'll have to drill a separate hole for the audio jack; it's not shown on the template, that way you can put it on the side of the case if you like.

____ **Assembling the Knobs**

The final step of assembly is to install the knobs onto the potentiometer shafts. Turn all of the shafts fully counter-clockwise, and then push on each knob so that the pointer on the knob aligns roughly to the 7 o'clock position.

That's it! The SDIY MDRONE is ready to use.

Operating the SDIY MDRONE

Using the SDIY MDRONE is easy and fun. Each of the three oscillators can be turned on or off, using the Osc On/Off toggle switches. The pitch of each oscillator can be controlled with the Osc1 thru Osc3 knobs.

The Filter Width and Filter Frequency knobs can be used to alter the harmonic content (timbre) of the drone.

Turning the Grit switch on and off (if you've implemented this feature) selects between mostly clean audio and rather dirty audio. Note that when the Grit switch is in the "on" position, the signal is clean. You may wish to rotate the switch so that it matches up with how you want the Grit label to indicate.

The volume knob controls the output signal level. Note that the output can go somewhat above normal line level; make sure the device you are plugging it into can handle that signal level before turning the volume up all the way.

Appendix - More Circuit Bending Ideas

The SDIY MDRONE is ripe for circuit bending. In addition to the ideas listed here, please join the Evaton Technologies User Forum, and follow the SDIY MDRONE thread. More circuit bending ideas will be posted there, and you can also post up your own experiments, too, so others can try hacking the circuit the way you have!

Filter Capacitor Hack

This circuit bend is easy to implement -- simply install a 0.47 uF 16V capacitor into locations C9 and C10. Then, connect a DPDT switch as shown in the following diagram. Now, toggling this switch shifts the center frequency of the bandpass filter very low. In combination with the Grit, this can make some interesting sounds. Experiment with different values of capacitors, or even put diodes or LEDs in place of C9 and C10, instead of the capacitors!

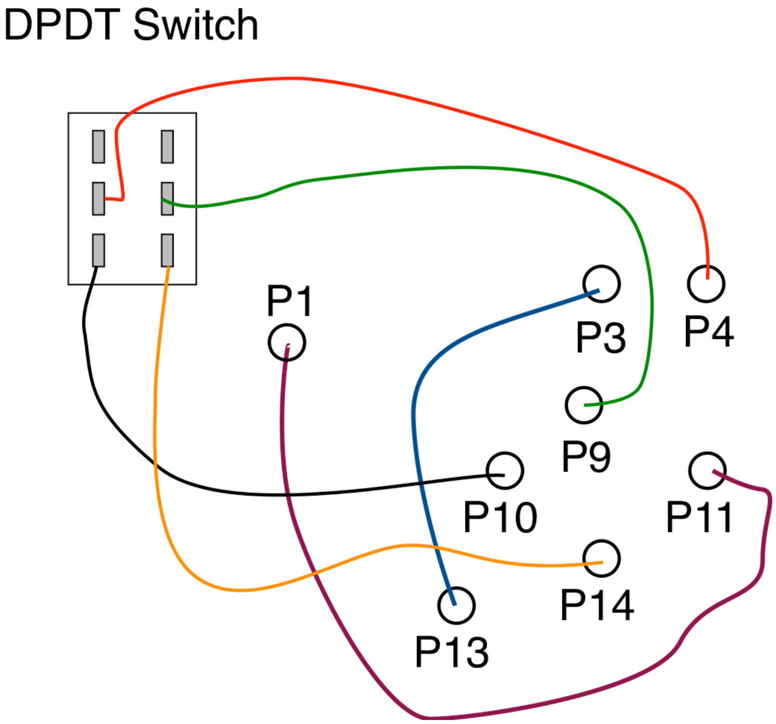

Virtual Ground Diode Hack

This circuit bend requires a toggle switch and a diode. Pretty much *any* diode will work; a 1N4001 is shown in the following diagram. Even an LED will work, to a different degree.

Solder the Anode end of a diode to the end of R5 that is furthest from the edge of the PCB. The Anode end is the end opposite the stripe on the diode. Solder a wire from the cathode end (the striped end) to a toggle switch.

Solder a wire from the other terminal on the toggle switch to the end of R5 that is nearest the edge of the PCB.

What this circuit bend does is to shift the voltage level of the virtual ground much closer to zero volts. This destabilizes the filter, causing it to be prone to chaotic oscillations, as well as starves out the signals going into the summing mixer. Try it and see!

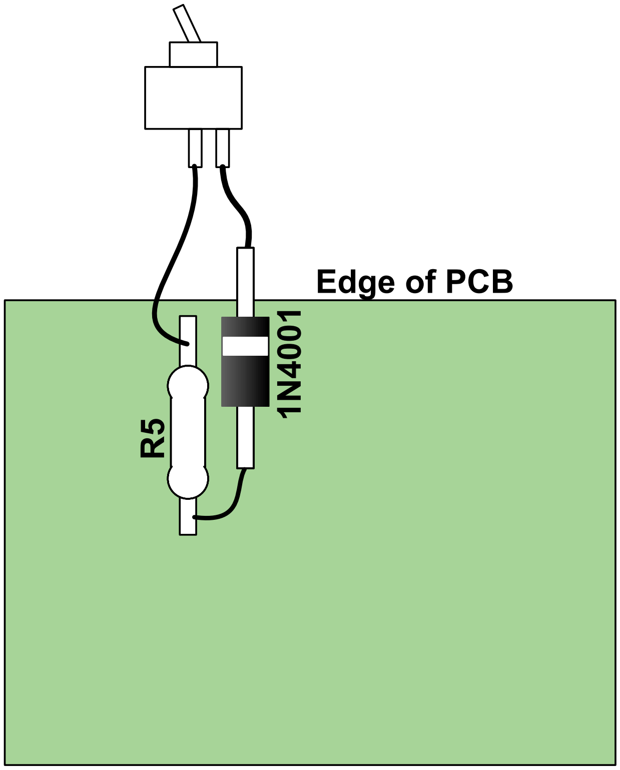

More Circuit Bends

Check back periodically on the Evaton website to see more circuit bending ideas, or, please join the Evaton Technologies user forums at:

http://www.evatontechnologies.com/apps/forums

And be sure to post up some of your own circuit bending experiments!

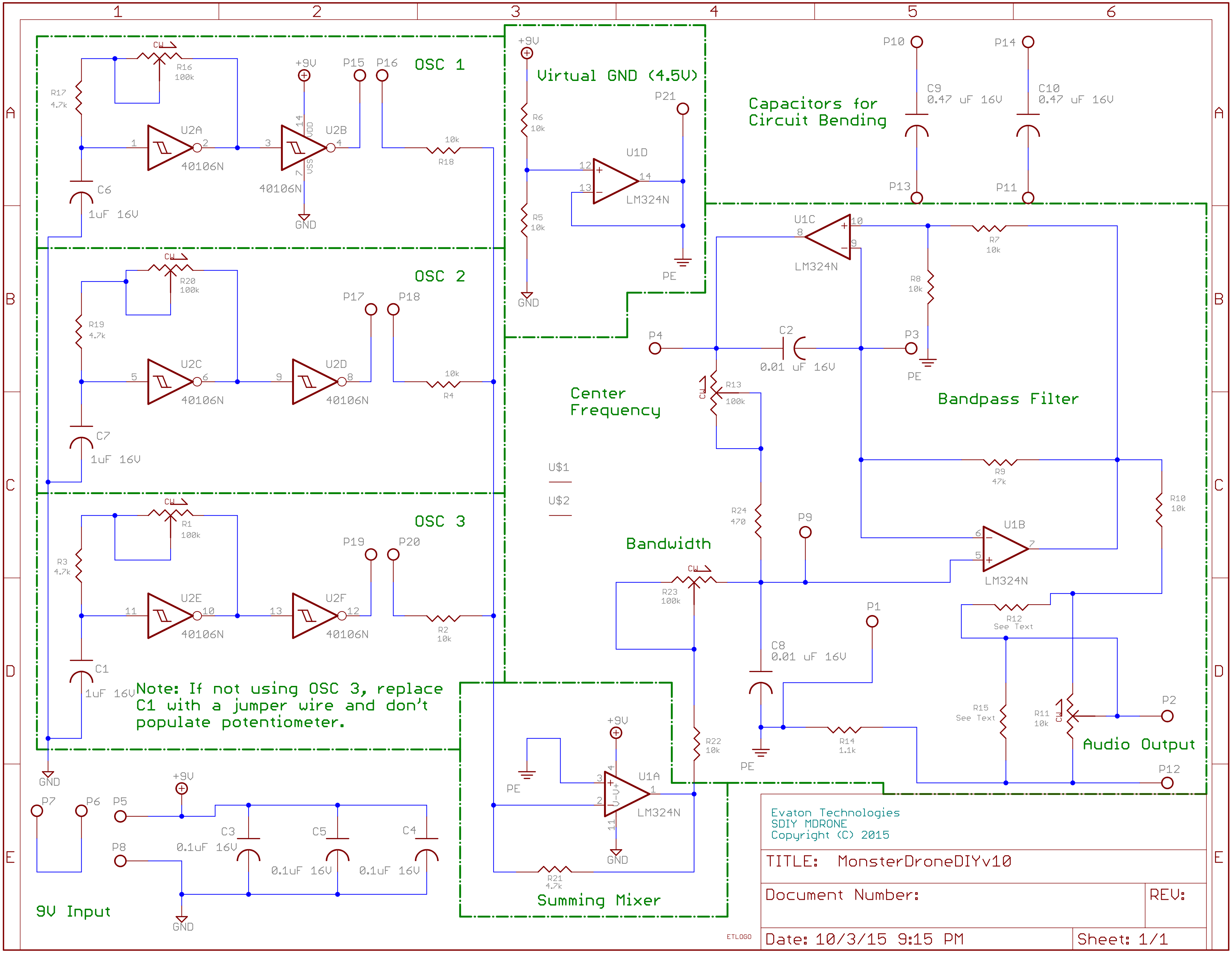
OSC 1
OSC 2
OSC 3
Virtual GND (4.5V)
Capacitors for
Circuit Bending
Center
Frequency
Bandwidth
Bandpass Filter
Audio Output
Summing Mixer
9V Input
Note: If not using OSC 3, replace C1 with a jumper wire and don't populate potentiometer.
1
2
3
4
5
6
A
B
C
D
E
R17 4.7k
R16 100k
CW
U2A
U2B
40106N
VDD
VSS
14
7
+9V
GND
P15
P16
R18 10k
C6 1uF 16V
R19 4.7k
R20 100k
U2C
U2D
P17
P18
R4 10k
C7 1uF 16V
R3 4.7k
R1 100k
U2E
U2F
P19
P20
R2 10k
C1 1uF 16V
R6 10k
R5 10k
U1D
LM324N
P21
PE
P10
P14
C9 0.47 uF 16V
C10 0.47 uF 16V
P13
P11
U1C
R7 10k
R8 10k
P4
C2 0.01 uF 16V
P3
R13 100k
R9 47k
R10 10k
U$1
U$2
R24 470
P9
U1B
R23 100k
R12 See Text
P1
C8 0.01 uF 16V
R15 See Text
R11 10k
P2
P12
R22 10k
R14 1.1k
U1A
R21 4.7k
P7
P6
P5
P8
C3 0.1uF 16V
C5 0.1uF 16V
C4 0.1uF 16V
ETLOGO

Evaton Technologies
SDIY MDRONE
Copyright (C) 2015

TITLE: MonsterDroneDIYv10

Document Number: | REV:

Date: 10/3/15 9:15 PM | Sheet: 1/1

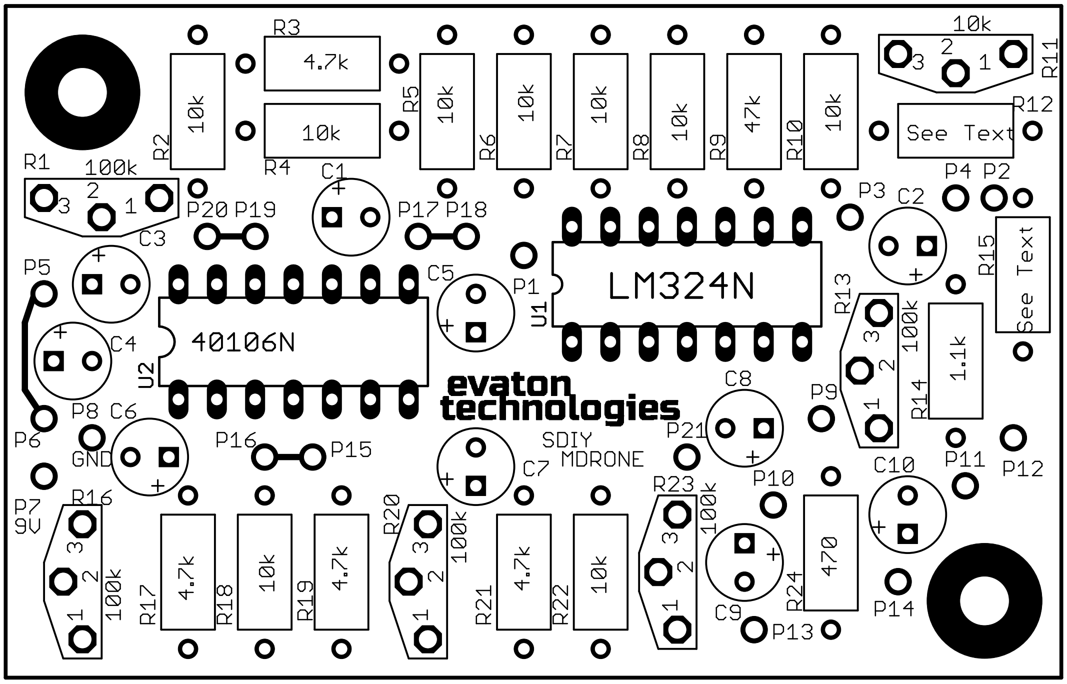

evaton
technologies
SDIY
MDRONE
LM324N
U1
40106N
U2
R1 100k 3 2 1
R2 10k
R3 4.7k
R4 10k
R5 10k
R6 10k
R7 10k
R8 10k
R9 47k
R10 10k
R11 10k 3 2 1
R12 See Text
R13 100k 3 2 1
R14 1.1k
R15 See Text
R16 100k 3 2 1
R17 4.7k
R18 10k
R19 4.7k
R20 100k 3 2 1
R21 4.7k
R22 10k
R23 100k 3 2 1
R24 470
C1 C2 C3 C4 C5 C6 C7 C8 C9 C10
P1 P2 P3 P4 P5 P6 P7 9V P8 GND P9 P10 P11 P12 P13 P14 P15 P16 P17 P18 P19 P20 P21

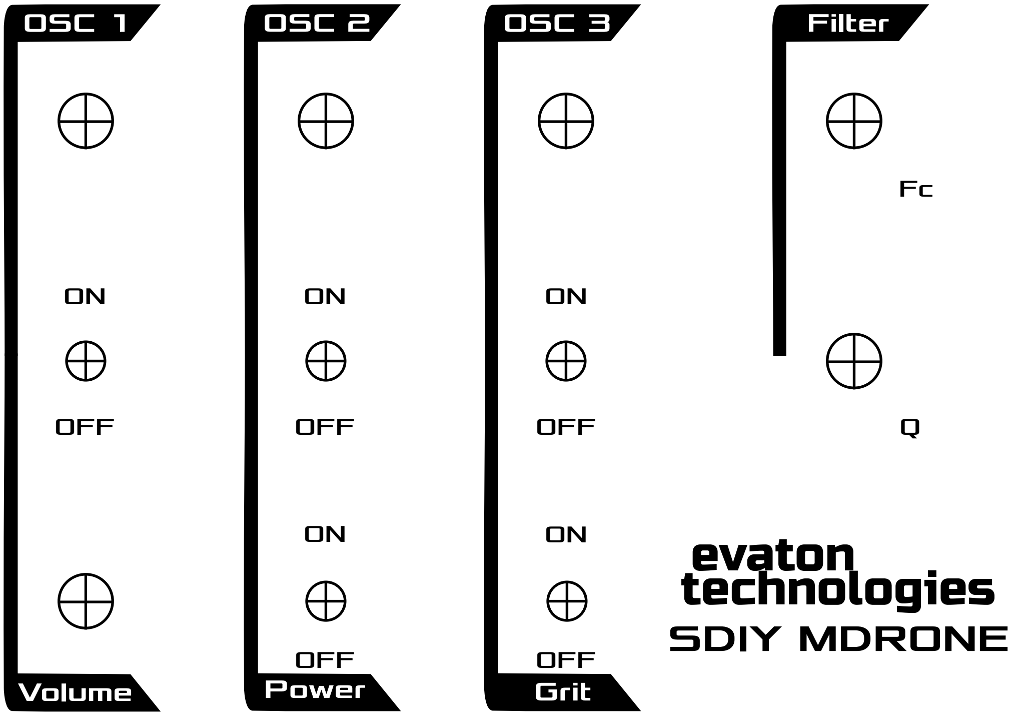
OSC 1
OSC 2
OSC 3
Filter
Fc
ON
OFF
ON
OFF
ON
OFF
ON
OFF
ON
OFF
Q
evaton technologies
SDIY MDRONE
Volume
Power
Grit

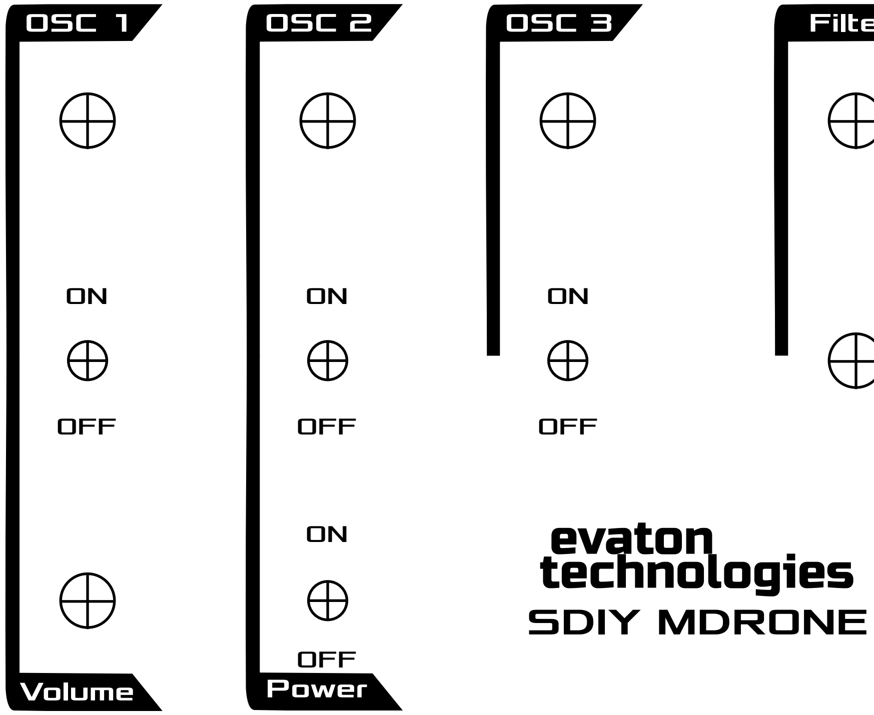
OSC 1
OSC 2
OSC 3
Filter
Fc
ON
OFF
ON
OFF
ON
OFF
Q
ON
OFF
evaton technologies
SDIY MDRONE
Volume
Power